Cambridge International AS & A Level

Cambridge International Examinations
Cambridge International Advanced Subsidiary and Advanced Level

PHYSICS **9702/13**

Paper 1 Multiple Choice **May/June 2014**

1 hour

Additional Materials: Multiple Choice Answer Sheet
Soft clean eraser
Soft pencil (type B or HB is recommended)

* 1 4 3 3 9 2 6 4 6 2 *

READ THESE INSTRUCTIONS FIRST

Write in soft pencil.
Do not use staples, paper clips, glue or correction fluid.
Write your name, Centre number and candidate number on the Answer Sheet in the spaces provided unless this has been done for you.
DO **NOT** WRITE IN ANY BARCODES.

There are **forty** questions on this paper. Answer **all** questions. For each question there are four possible answers **A**, **B**, **C** and **D**.
Choose the **one** you consider correct and record your choice in **soft pencil** on the separate Answer Sheet.

Read the instructions on the Answer Sheet very carefully.

Each correct answer will score one mark. A mark will not be deducted for a wrong answer.
Any working should be done in this booklet.
Electronic calculators may be used.

IB14 06_9702_13/3RP
© UCLES 2014

Data

speed of light in free space, $c = 3.00 \times 10^{8}\,\text{m s}^{-1}$

permeability of free space, $\mu_0 = 4\pi \times 10^{-7}\,\text{H m}^{-1}$

permittivity of free space, $\varepsilon_0 = 8.85 \times 10^{-12}\,\text{F m}^{-1}$

$\left(\dfrac{1}{4\pi\varepsilon_0} = 8.99 \times 10^{9}\,\text{m F}^{-1}\right)$

elementary charge, $e = 1.60 \times 10^{-19}\,\text{C}$

the Planck constant, $h = 6.63 \times 10^{-34}\,\text{J s}$

unified atomic mass constant, $u = 1.66 \times 10^{-27}\,\text{kg}$

rest mass of electron, $m_\text{e} = 9.11 \times 10^{-31}\,\text{kg}$

rest mass of proton, $m_\text{p} = 1.67 \times 10^{-27}\,\text{kg}$

molar gas constant, $R = 8.31\,\text{J K}^{-1}\,\text{mol}^{-1}$

the Avogadro constant, $N_\text{A} = 6.02 \times 10^{23}\,\text{mol}^{-1}$

the Boltzmann constant, $k = 1.38 \times 10^{-23}\,\text{J K}^{-1}$

gravitational constant, $G = 6.67 \times 10^{-11}\,\text{N m}^2\,\text{kg}^{-2}$

acceleration of free fall, $g = 9.81\,\text{m s}^{-2}$

© UCLES 2014

Formulae

uniformly accelerated motion, $s = ut + \frac{1}{2}at^2$

$v^2 = u^2 + 2as$

work done on/by a gas, $W = p\Delta V$

gravitational potential, $\phi = -\frac{Gm}{r}$

hydrostatic pressure, $p = \rho gh$

pressure of an ideal gas, $p = \frac{1}{3}\frac{Nm}{V}\langle c^2 \rangle$

simple harmonic motion, $a = -\omega^2 x$

velocity of particle in s.h.m., $v = v_0 \cos \omega t$

$v = \pm \omega \sqrt{(x_0^2 - x^2)}$

electric potential, $V = \frac{Q}{4\pi\varepsilon_0 r}$

capacitors in series, $1/C = 1/C_1 + 1/C_2 + \ldots$

capacitors in parallel, $C = C_1 + C_2 + \ldots$

energy of charged capacitor, $W = \frac{1}{2}QV$

resistors in series, $R = R_1 + R_2 + \ldots$

resistors in parallel, $1/R = 1/R_1 + 1/R_2 + \ldots$

alternating current/voltage, $x = x_0 \sin \omega t$

radioactive decay, $x = x_0 \exp(-\lambda t)$

decay constant, $\lambda = \frac{0.693}{t_{\frac{1}{2}}}$

© UCLES 2014

1 Which quantity can be measured in electronvolts (eV)?

A electric charge

B electric potential

C energy

D power

2 The unit of specific heat capacity is $J\,kg^{-1}\,K^{-1}$.

What is its equivalent in terms of SI base units?

A $kg^{-1}\,m^2\,K^{-1}$ **B** $m\,s^{-1}\,K^{-1}$ **C** $m\,s^{-2}\,K^{-1}$ **D** $m^2\,s^{-2}\,K^{-1}$

3 What is the vertical component of this displacement vector?

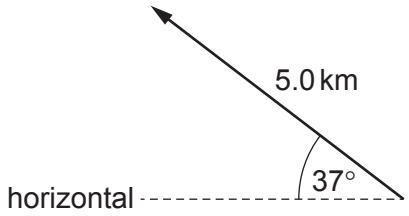

A 3.0 km **B** 3.8 km **C** 4.0 km **D** 5.0 km

Space for working

© UCLES 2014

4 The resistance of a lamp is calculated from the value of the potential difference (p.d.) across it and the value of the current passing through it.

Which statement correctly describes how to combine the uncertainties in the p.d. and in the current?

A Add together the actual uncertainty in the p.d. and the actual uncertainty in the current.

B Add together the percentage uncertainty in the p.d. and the percentage uncertainty in the current.

C Subtract the actual uncertainty in the current from the actual uncertainty in the p.d.

D Subtract the percentage uncertainty in the current from the percentage uncertainty in the p.d.

5 The display on a cathode-ray oscilloscope shows the signal produced by an electronic circuit. The time-base is set at 5.0 ns per division and the Y-gain at 10 V per division.

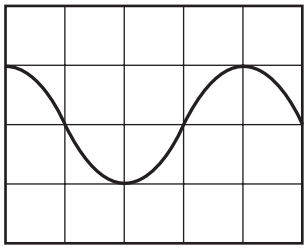

What is the frequency of the signal?

A 2.0×10^{-8} Hz

B 2.5×10^{-2} Hz

C 5.0×10^{7} Hz

D 3.1×10^{8} Hz

Space for working

© UCLES 2014

6 A digital caliper is used to measure the 28.50 mm width of a plastic ruler. The digital caliper reads to the nearest 0.01 mm.

What is the correct way to record this reading?

A $0.02850 \pm 0.01\,\text{m}$

B $0.0285 \pm 0.001\,\text{m}$

C $(2.850 \pm 0.001) \times 10^{-2}\,\text{m}$

D $(2.850 \pm 0.001) \times 10^{-3}\,\text{m}$

7 An experiment is performed to measure the acceleration of free fall *g*. A body falls between two fixed points. The four measurements shown below are taken.

Which measurement is **not** required for the calculation of *g*?

A the distance fallen by the body

B the initial velocity of the body

C the mass of the body

D the time taken for the body to fall

8 In a cathode-ray tube, an electron is accelerated uniformly in a straight line from a speed of $4 \times 10^{3}\,\text{m s}^{-1}$ to $2 \times 10^{7}\,\text{m s}^{-1}$ over a distance of 10 mm.

What is the acceleration of the electron?

A $2 \times 10^{3}\,\text{m s}^{-2}$

B $2 \times 10^{6}\,\text{m s}^{-2}$

C $2 \times 10^{13}\,\text{m s}^{-2}$

D $2 \times 10^{16}\,\text{m s}^{-2}$

Space for working

© UCLES 2014

9 The graph shows how the speed v of a sprinter changes with time t during a 100 m race.

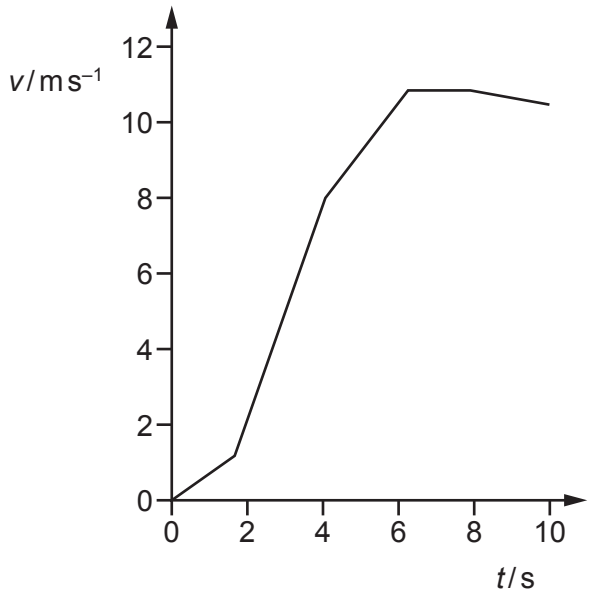

What is the best estimate of the maximum acceleration of the sprinter?

A $0.5\,m\,s^{-2}$ **B** $1\,m\,s^{-2}$ **C** $3\,m\,s^{-2}$ **D** $10\,m\,s^{-2}$

10 A tennis ball is dropped onto a table and bounces back up. The table exerts a force F on the ball.

Which graph best shows the variation with time t of the force F while the ball is in contact with the table?

A

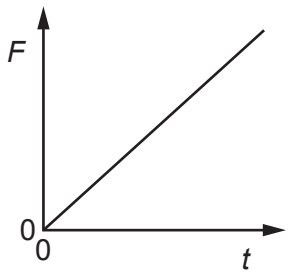

B

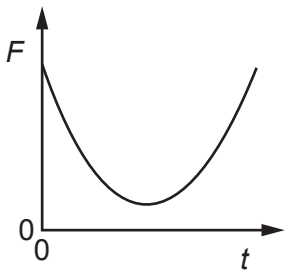

C

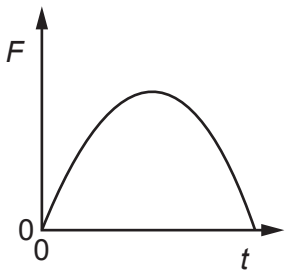

D

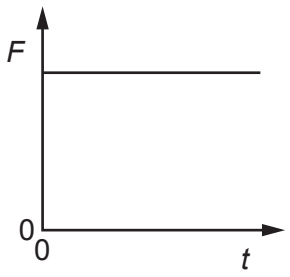

Space for working

11 A resultant force of 10 N acts on a body for a time of 2.0 s.

Which graph could show the variation with time t of the momentum p of the body?

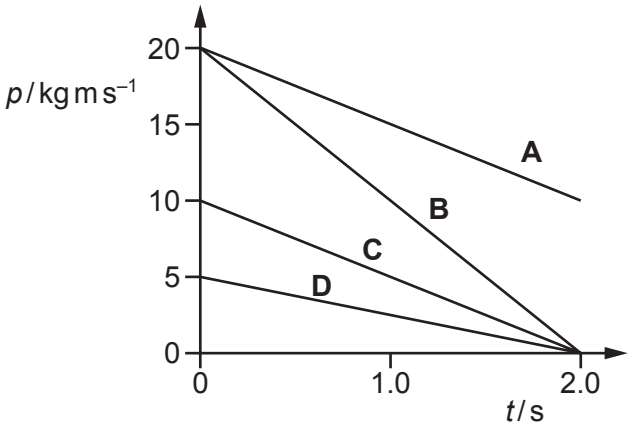

12 A stationary body explodes into two components of masses m and $2m$.

The components gain kinetic energies X and Y respectively.

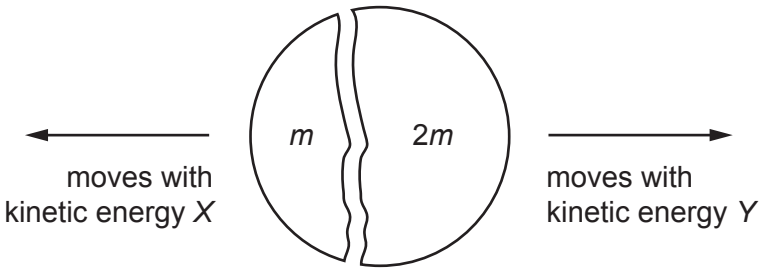

What is the value of the ratio $\frac{X}{Y}$?

A $\frac{1}{4}$ **B** $\frac{1}{2}$ **C** $\frac{2}{1}$ **D** $\frac{4}{1}$

Space for working

13 What is the condition for an object to be in equilibrium?

A The object's velocity and the resultant torque on it must both be zero.

B The object's velocity must be zero.

C The resultant force and the resultant torque on the object must both be zero.

D The resultant force on the object must be zero.

14 A uniform solid cuboid of concrete of dimensions 0.50 m × 1.20 m × 0.40 m and weight 4000 N rests on a flat surface with the 1.20 m edge vertical as shown in diagram 1.

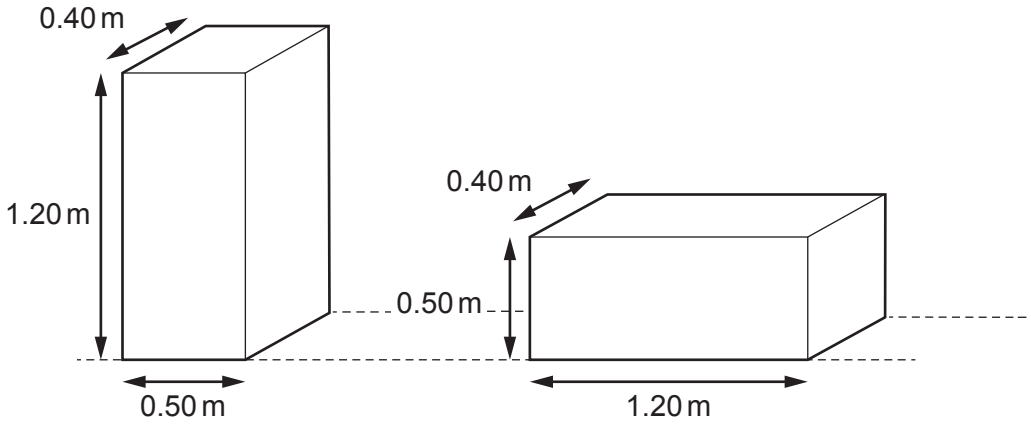

diagram 1 diagram 2

What is the minimum energy required to roll the cuboid through 90° to the position shown in diagram 2 with the 0.50 m edge vertical?

A 200 J **B** 400 J **C** 1400 J **D** 2600 J

Space for working

15 A uniform beam is pivoted at P as shown. Weights of 10 N and 20 N are attached to its ends.

The length of the beam is marked at 0.1 m intervals. The weight of the beam is 100 N.

At which point should a further weight of 20 N be attached to achieve equilibrium?

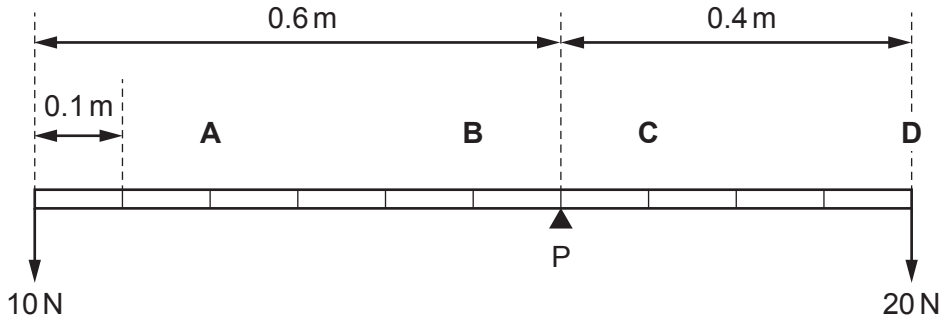

16 An electric motor has an input power P_{in}, useful output power P_{out} and efficiency η.

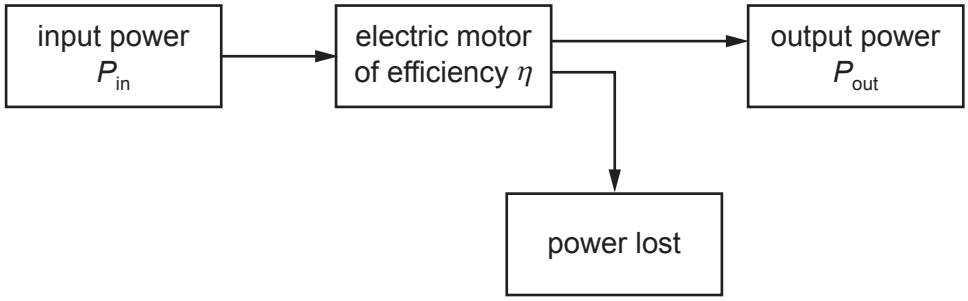

How much power is lost by the motor?

A ηP_{in} **B** $\left(\frac{1}{\eta}-1\right)P_{in}$ **C** ηP_{out} **D** $\left(\frac{1}{\eta}-1\right)P_{out}$

17 A shot-put champion accelerates a 7.0 kg metal ball in a straight line. The ball moves from rest to a speed of 12 m s^{-1} in a distance of 1.2 m.

What is the average resultant force on the metal ball?

A 70 N **B** 210 N **C** 420 N **D** 840 N

Space for working

© UCLES 2014

18 A ball drops onto a horizontal surface and bounces elastically.

What happens to the kinetic energy of the ball during the very short time that it is in contact with the surface?

A Most of the kinetic energy is lost as heat and sound energy.

B The kinetic energy decreases to zero and then returns to its original value.

C The kinetic energy remains constant because it is an elastic collision.

D The kinetic energy remains constant in magnitude but changes direction.

19 When the water in a pond freezes, it changes from a liquid to a solid. When this occurs, it changes volume and exchanges energy with the surroundings.

Which row is correct?

	change of volume	energy exchange
A	contracts	gives out energy to the surroundings
B	contracts	takes in energy from the surroundings
C	expands	gives out energy to the surroundings
D	expands	takes in energy from the surroundings

20 Which process does **not** require energy to be supplied?

A boiling

B evaporation

C freezing

D melting

Space for working

© UCLES 2014

[Turn over

21 The graph shows the distribution of speeds for the molecules of a gas at a particular temperature.



Which statement is correct?

A All the molecules have the same kinetic energy.

B The commonest value of speed is also the average speed.

C The graph shows that the molecules of a gas are widely spaced apart.

D The peak value of the graph would move to the right if the temperature is increased.

22 The Mariana Trench in the Pacific Ocean has a depth of about 10 km.

Assuming that sea water is incompressible and has a density of about 1020 kg m^{-3}, what would be the approximate pressure at that depth?

A 10^5 Pa **B** 10^6 Pa **C** 10^7 Pa **D** 10^8 Pa

23 An elastic material with a Young modulus E is subjected to a tensile stress S. Hooke's Law is obeyed.

What is the expression for the elastic energy stored per unit volume of the material?

A $\frac{S^2}{2E}$ **B** $\frac{S^2}{E}$ **C** $\frac{E}{2S^2}$ **D** $\frac{2E}{S^2}$

Space for working

© UCLES 2014

24 Cylindrical samples of steel, glass and rubber are each subjected to a gradually increasing tensile force *F*. The extensions *e* are measured and graphs are plotted as shown below.

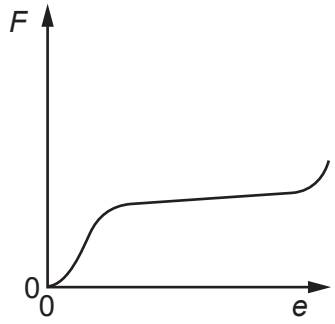

graph X

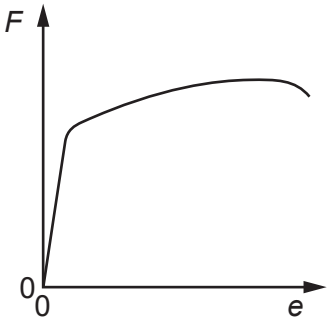

graph Y

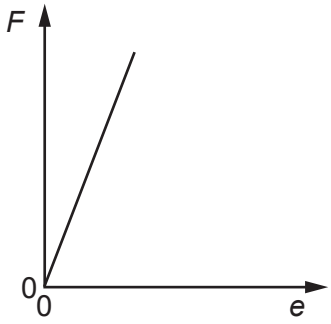

graph Z

Which row correctly relates the graphs to the materials?

	steel	glass	rubber
A	X	Y	Z
B	X	Z	Y
C	Y	X	Z
D	Y	Z	X

25 A cathode-ray oscilloscope (c.r.o.) displays a waveform corresponding to a sound wave.

In order to determine the frequency of the sound wave, which part of the displayed waveform must be measured and which c.r.o. setting must be known?

	on-screen measurement	c.r.o. setting
A	amplitude	time-base
B	amplitude	Y-gain
C	wavelength	time-base
D	wavelength	Y-gain

Space for working

© UCLES 2014

26 What is the approximate range of frequencies of infra-red radiation?

A 1×10^3 Hz to 1×10^9 Hz

B 1×10^9 Hz to 1×10^{11} Hz

C 1×10^{11} Hz to 1×10^{14} Hz

D 1×10^{14} Hz to 1×10^{17} Hz

27 A small source emits spherical waves.

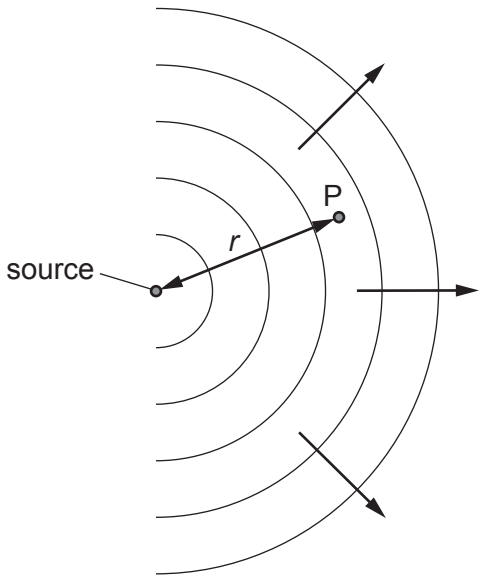

The wave intensity I at any point P, a distance r from the source, is inversely proportional to r^2.

What is the relationship between the wave amplitude a and the distance r?

A $a^2 \propto \frac{1}{r}$ **B** $a \propto \frac{1}{r}$ **C** $a \propto \frac{1}{r^2}$ **D** $a \propto \frac{1}{r^4}$

Space for working

28 A student attempts to show the interference of light using two identical green LEDs.

Which statement explains why the experiement will **not** succeed?

A The light waves from the sources are not coherent.

B The light waves from the sources do not have the same amplitude.

C The light waves from the sources have a range of wavelengths.

D The light waves from the sources are not monochromatic.

29 A stationary wave is set up on a stretched string, as shown.

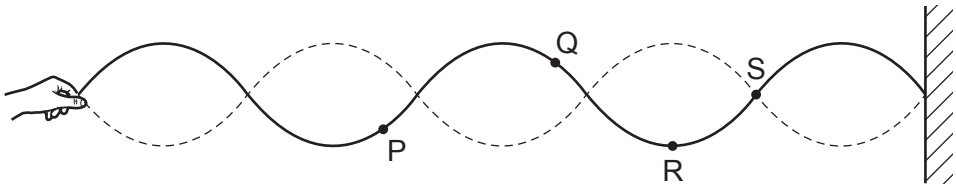

Which statement about the points on the string is correct?

A Point Q vibrates with the largest amplitude.

B Points P and R vibrate in phase.

C Point S is an antinode.

D The horizontal distance between R and S is half the wavelength.

30 Monochromatic light is incident on a diffraction grating and a diffraction pattern is observed.

Which line of the table gives the effect of replacing the grating with one that has more lines per metre?

	number of orders of diffraction visible	angle between first and second orders of diffraction
A	decreases	decreases
B	decreases	increases
C	increases	decreases
D	increases	increases

Space for working

31 An electron enters a region of space where there is a uniform electric field *E* as shown.

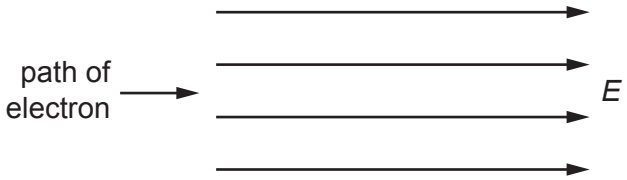

Initially, the electron is moving parallel to, and in the direction of, the electric field.

What is the subsequent path and change of speed of the electron?

	path of electron	speed of electron
A	linear	decreases
B	linear	increases
C	parabolic	decreases
D	parabolic	increases

Space for working

© UCLES 2014

32 Two parallel plates X and Y are separated by a distance d in a vacuum. There is a potential difference between the plates so that a uniform electric field is produced.

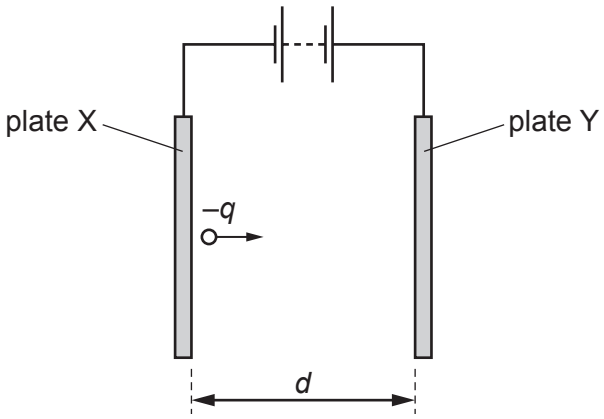

A charge $-q$ moves from rest from the surface of plate X and travels towards plate Y.

When the charge reaches plate Y it has kinetic energy K.

Which expression gives the electric field strength between the plates?

A $\frac{q}{Kd}$ **B** $\frac{qd}{K}$ **C** $\frac{K}{qd}$ **D** $\frac{Kd}{q}$

Space for working

33 Two wires P and Q made of the same material and of the same length are connected in parallel to the same voltage supply. Wire P has diameter 2 mm and wire Q has diameter 1 mm.

What is the ratio $\frac{\text{current in P}}{\text{current in Q}}$?

A $\frac{1}{4}$ **B** $\frac{1}{2}$ **C** $\frac{2}{1}$ **D** $\frac{4}{1}$

34 A cell has an electromotive force (e.m.f.) of 6 V and internal resistance R. An external resistor, also of resistance R, is connected across this cell, as shown.

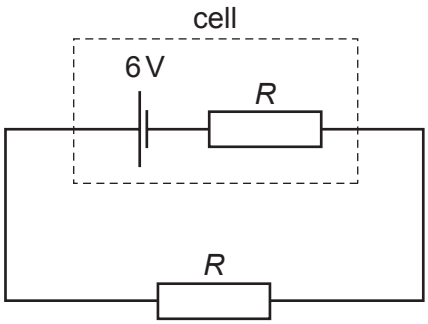

Power P is dissipated by the external resistor.

The cell is replaced by a different cell that has an e.m.f. of 6 V and negligible internal resistance.

What is the new power that is dissipated in the external resistor?

A 0.5P **B** P **C** 2P **D** 4P

Space for working

© UCLES 2014

35 The diagram shows a low-voltage circuit for heating the water in a fish tank.

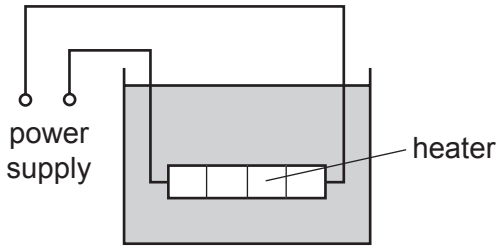

The heater has a resistance of 3.0 Ω. The power supply has an e.m.f. of 12 V and an internal resistance of 1.0 Ω.

At which rate is energy supplied to the heater?

A 27 W **B** 36 W **C** 48 W **D** 64 W

Space for working

36 The diagrams show the same cell, ammeter, potentiometer and fixed resistor connected in different ways.

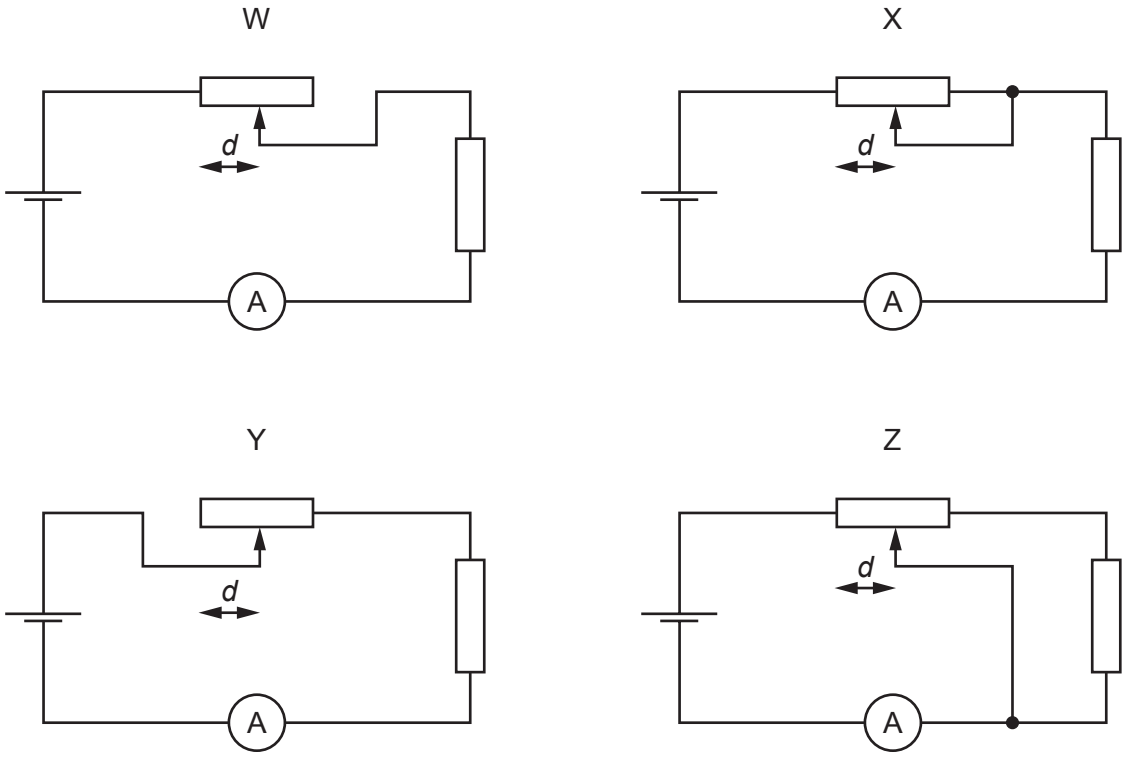

The distance *d* between the sliding contact and a particular end of the potentiometer is varied. The current measured is then plotted against the distance *d*.

For which two circuits will the graphs be identical?

A W and X **B** W and Y **C** X and Y **D** Y and Z

Space for working

© UCLES 2014

37 What is the current in the 40 Ω resistor of the circuit shown?

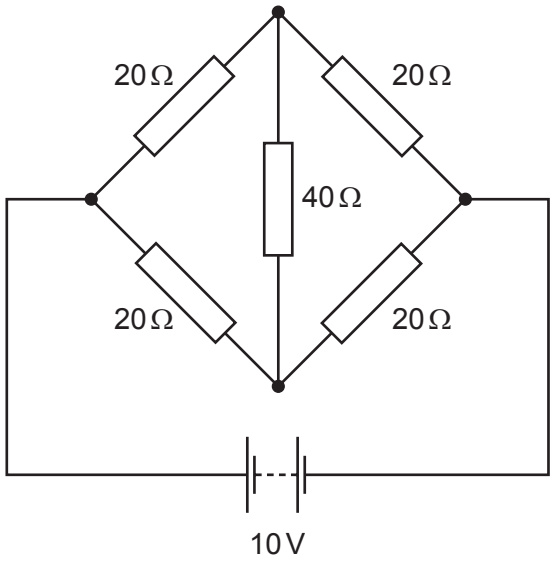

A zero **B** 0.13 A **C** 0.25 A **D** 0.50 A

38 A battery of negligible internal resistance is connected to a resistor network, an ammeter and a switch S, as shown.

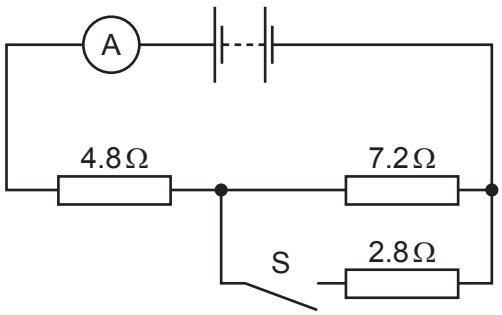

When S is open, the reading on the ammeter is 250 mA.

When S is closed, what is the **change** in the reading on the ammeter?

A 1.07 A **B** 1.32 A **C** 190 mA **D** 440 mA

Space for working

39 An isotope of thorium has a nucleon number of 232 and a proton number of 90. It decays to form another isotope of thorium with a nucleon number of 228.

How many alpha particles and beta particles are emitted by a nucleus of thorium during this decay?

	alpha particles	beta particles
A	0	4
B	1	0
C	1	2
D	2	1

40 Four nuclei are represented below.

$$^{28}_{14}\mathrm{E} \qquad ^{25}_{15}\mathrm{G} \qquad ^{25}_{12}\mathrm{M} \qquad ^{24}_{13}\mathrm{Q}$$

Which statement about these nuclei is correct?

A An uncharged atom of element Q has 24 orbital electrons.

B Nucleus M could transform into Q by emitting a beta particle.

C Nuclei G and M are isotopes of the same element.

D When E absorbs a neutron and then emits an alpha particle, nucleus E transforms into M.

Space for working

© UCLES 2014

BLANK PAGE

BLANK PAGE

Permission to reproduce items where third-party owned material protected by copyright is included has been sought and cleared where possible. Every reasonable effort has been made by the publisher (UCLES) to trace copyright holders, but if any items requiring clearance have unwittingly been included, the publisher will be pleased to make amends at the earliest possible opportunity.

Cambridge International Examinations is part of the Cambridge Assessment Group. Cambridge Assessment is the brand name of University of Cambridge Local Examinations Syndicate (UCLES), which is itself a department of the University of Cambridge.